Warranty Information

This product has a limited 1 year warranty in North America and Australia.
For information on warranty periods in other regions, please contact your reseller or SilverStone authorized distributor.

Warranty terms & conditions

1. Product component defects or damages resulted from defective production is covered under warranty.
   Defects or damages with the following conditions will be fixed or replaced under SilverStone Technology's jurisdiction.
a) Usage in accordance with instructions provided in this manual, with no misuse, overuse, or other inappropriate actions.
b) Damage not caused by natural disaster (thunder, fire, earthquake, flood, salt, wind, insect, animals, etc...)
c) Product is not disassembled, modified, or fixed. Components not disassembled or replaced.
d) Warranty mark/stickers are not removed or broken.
   Loss or damages resulted from conditions other than ones listed above are not covered under warranty.

2. Under warranty, SilverStone Technology's maximum liability is limited to the current market value for the product (depreciated value, excluding shipping, handling, and other fees). SilverStone Technology is not responsible for other damages or loss associated with the use of product.

3. Under warranty, SilverStone Technology is obligated to repair or replace its defective products. Under no circumstances will SilverStone Technology be liable for damages in connection with the sale, purchase, or use including but not limited to loss of data, loss of business, loss of profits, loss of use of the product or incidental or consequential damage whether or not foreseeable and whether or not based on breach of warranty, contract or negligence, even if SilverStone Technology has been advised of the possibility of such damages.

4. Warranty covers only the original purchaser through authorized SilverStone distributors and resellers and is not transferable to a second hand purchaser.

5. You must provide sales receipt or invoice with clear indication of purchase date to determine warranty eligibility.

6. If a problem develops during the warranty period, please contact your retailer/reseller/SilverStone authorized distributors or SilverStone **http://www.silverstonetek.com**.
   Please note that: (i) You must provide proof of original purchase of the product by a dated itemized receipt; (ii) You shall bear the cost of shipping (or otherwise transporting) the product to SilverStone authorized distributors. SilverStone authorized distributors will bear the cost of shipping (or otherwise transporting) the product back to you after completing the warranty service; (iii) Before you send the product, you must be issued a Return Merchandise Authorization ("RMA") number from SilverStone. Updated warranty information will be posted on SilverStone's official website. Please visit **http://www.silverstonetek.com** for the latest updates.

Additional info & contacts

For North America (usasupport@silverstonetek.com)
SilverStone Technology in North America may repair or replace defective product with refurbished product that is not new but has been functionally tested. Replacement product will be warranted for remainder of the warranty period or thirty days, whichever is longer. All products should be sent back to the place of purchase if it is within 30 days of purchase, after 30 days, customers need to initiate RMA procedure with SilverStone Technology in USA by first downloading the "USA RMA form for end-users" form from the below link and follow its instructions.
http://silverstonetek.com/contactus.php

For Australia only (support@silverstonetek.com)
Our goods come with guarantees that cannot be excluded under the Australian Consumer Law.
You are entitled to a replacement or refund for a major failure and for compensation for any other reasonably foreseeable loss or damage.
You are also entitled to have the goods repaired or replaced if the goods fail to be of acceptable quality and the failure does not amount to a major failure.
Please refer to above "Warranty terms & conditions" for further warranty details.
SilverStone Technology Co., Ltd. 12F No. 168 Jiankang Rd., Zhonghe Dist., New Taipei City 235 Taiwan R.O.C. + 886-2-8228-1238
(standard international call charges apply)

For Europe (support.eu@silverstonetek.de)
For all other regions (support@silverstonetek.com)

SilverStone Technology Co., Ltd.

www.silverstonetek.com

support@silverstonetek.com

NO: G11225550

SILVERSTONE®
Designing Inspiration

PRECISION SERIES

Affordable, simple, and great performing ATX tower chassis

PS13

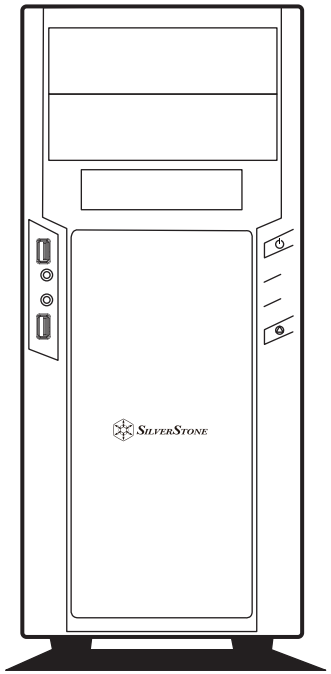

Quick access filters for easy cleaning
Motherboard back plate opening for quick CPU cooler assembly
All black painted interior for stylish look
Supports graphics cards up to 13.7 inches
Highly flexible drive storage options

Specifications

Model No.	SST-PS13B (black), SST-PS13B-W (black + window)	
Material	Plastic panel, steel body	
Motherboard	ATX (up to 12" x11") , Micro ATX	
Drive Bay	External	5.25" x 2, 3.5" x 1
	Internal	3.5"x 1, 2.5" or 3.5"HDD x 2
Cooling System	Front	120mm fan slot x 2 (included 120mm fan x 1)
	Rear	120mm fan slot x 1
	Bottom	120mm fan slot x 1
	Side	120mm fan slot x 2 (SST-PS13B only)
Expansion Slot	7	
Front I/O Port	USB 3.0 x 2, audio x 1, MIC x 1	
Power Supply	Standard PS2 (ATX)	
Expansion Card	Support up to 13.7", width restriction* - 4.92"~5.91"	
CPU cooler Limit	162mm (none window), 159mm (window)	
PSU Limit	174mm	
Dimension	182mm (W) x 426mm (H) x 400mm (D) , 31 liters	

***Depending on installed drives**

PICTURE	ITEM	PURPOSE
	SCREW A #6-32 X4	MOTHERBOARD STANDOFF
	SCREW B M3 X4	SECURE 2.5" HDD
	SCREW C #6-32 X5	SECURE PSU, MB, 3.5" HDD
	SCREW SLEEVE	SECURE STANDOFF
	PACKAGE	
	MANUAL	

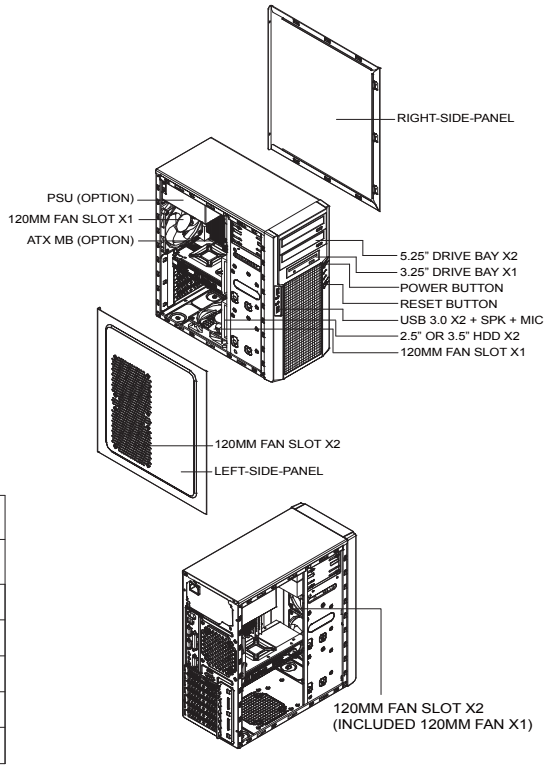

3.5” & 5.25” Front Bay Device Installation

1

ENGLISH
Remove front panel as indicated in the diagram

DEUTSCH
Frontblende wie abgebildet entfernen

FRANÇAIS
Retirez le panneau frontal comme indiqué dans le diagramme

ESPAÑOL
Retire el panel frontal como se indica en el diagrama

ITALIANO
Rimuovere il pannello frontale come indicato nella figura

РУССКИЙ
Снимите лицевую панель, как показано на рисунке

繁體中文
請依圖示由面板正面取下擋版

日 本 語
図示されるようにフロントパネ ルを取り外します

한 국 어
그림과 같이 전면 패널을 분리합니다

简体中文
请依图示由面板正面取下挡版

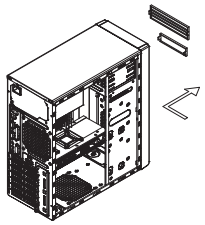

2

ENGLISH
Secure with screws from both side

DEUTSCH
Mit Schrauben von beiden Seiten sichern

FRANÇAIS
Fixez avec des vis de chaque côté

ESPAÑOL
Asegure con tornillos desde ambos lados

ITALIANO
Fissare con viti su entrambi i lati

РУССКИЙ
Закрепите винтами с обеих сторон

繁體中文
於兩側鎖上螺絲固定

日 本 語
ネジで両側を固定します

한 국 어
양쪽 나사로 고정합니다

简体中文
于两侧锁上螺丝固定

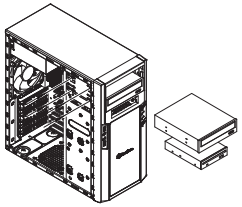

2.5” / 3.5” Disk Device Installation

ENGLISH
Install and secure the 2.5” / 3.5” hard drive onto the hard drive bracket

DEUTSCH
Installieren und fixieren Sie die 2.5 / 3,5 Zoll-Festplatte in der Festplattenhalterung

FRANÇAIS
Installez et fixez le disque dur de 2.5” / 3,5”sur la console du disque dur

ESPAÑOL
Instale y fije el disco duro de 2.5” / 3,5” al bracket para discos duros

ITALIANO
Installare e fissare il disco rigido da 2.5” / 3,5” al relativo supporto

РУССКИЙ
Установите на кронштейн и закрепите 2.5 / 3,5-дюймовый жесткий диск

繁體中文
將2. 5” / 3. 5”硬碟安裝至硬碟架。

日 本 語
2.5” / 3.5” ハードディスクドライブをハー ドディスク・ブラケットにインストー ルして固定します

한 국 어
2.5” / 3.5” 드라이브를 하드 드라이브 브래킷에 장착하고 고정합니다

简体中文
将2. 5” / 3. 5”硬盘安装至硬盘架

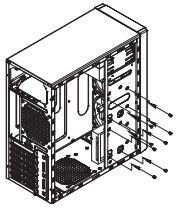

Component size limitations

The PS13 was designed to accommodate oversized components, but we still recommend referring to the following dimension guidelines:

(1) CPU Cooler limitation

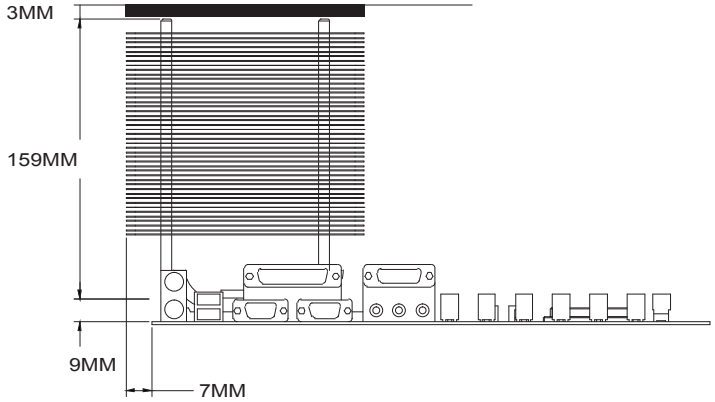

ENGLISH
Height limitation for CPU cooler is 162mm with 7mm clearance over the motherboard’s top edge.

DEUTSCH
Höhenbeschränkung für CPU-Kühler 162 mm mit einem Freiraum von 7 mm oberhalb der Motherboard-Oberkante.

FRANÇAIS
La limitation de hauteur des refroidisseurs de processeurs est 162mm avec un espace de 7mm au-dessus du bord supérieur de la carte mere

ESPAÑOL
La limitación de altura para disipadores de CPU es de 162mm con un espacio libre de 7mm sobre el borde superior de la placa base.

ITALIANO
La limitazione dell’altezza del dissipatore di calore CPU è di 162 millimetri con uno spazio libero di 7 mm sopra il bordo superiore della scheda madre.

РУССКИЙ
Ограничение по высоте для системы охлаждения процессора составляет 162 мм с 7-мм зазором над верхним краем системной платы.

繁體中文
Cooler限高是162mm, Cooler外源允許超出主機板上邊界7mm

日 本 語
CPUクーラーの高さ限度は、マザーボード上側の余裕7mmを取って、162mmです。

한 국 어
CPU 쿨러의 높이 제한은 162mm로서 메인보드 상단 가장자리 위로의 허용 오차가 7mm입니다.

简体中文
Cooler限高是162mm, Cooler外源允许超出主板上边界7mm

(2) Power supply limitation

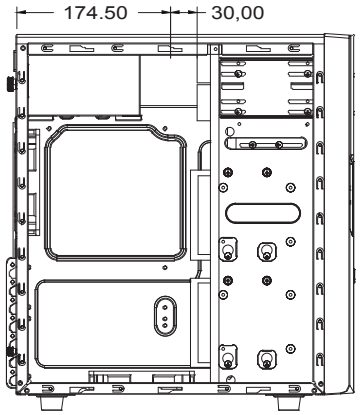

ENGLISH
The PS13 supports power supply with depth of up to 174mm.

DEUTSCH
Das PS13 unterstützt Netzteile mit einer Tiefe von bis zu 174 mm.

FRANÇAIS
Le PS13 est compatible avec les alimentations d'une profondeur inférieure ou égale à 174mm.

ESPAÑOL
La PS13 acepta fuentes de alimentación con una profundidad de hasta 174mm.

ITALIANO
PS13 supporta alimentatori con profondità fino a 174mm.

РУССКИЙ
Корпус PS13 допускает установку блока питания глубиной до 174 мм.

繁體中文
PS13的PSU可用總空間有174mm

日 本 語
PS13は最高174mmの奥行きの電源をサポートします。

한 국 어
PS13은 174mm의 깊이를 갖는 파워 서플라이까지 지원합니다.

简体中文
PS13的PSU可用总空间有174mm

(3) Graphics card / expansion card length limitation

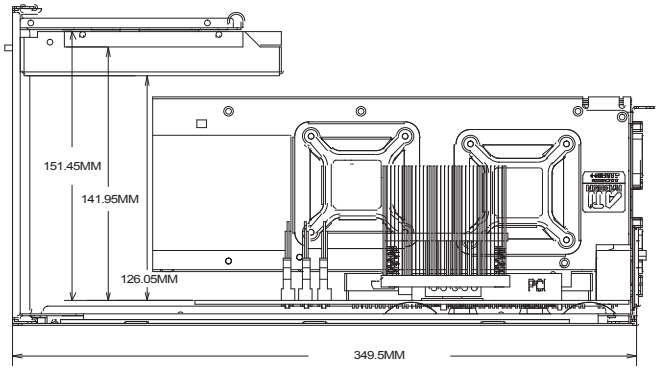

ENGLISH
PS13 can support expansion/graphics card up to 13.7 inches (349mm), which should apply to nearly all retail or consumer cards. There is width restriction of 4.92 inches (125mm) to 5.91 inches (150mm) depending on the thickness of the drives installed on the side plate.

DEUTSCH
PS13 kann eine Erweiterungs-/Grafikkarte bis 349 mm unterstützen, womit nahezu alle im Einzelhandel erhältlichen Karten abgedeckt sind. Es gibt je nach Dicke der an der seitlichen Blende installierten Laufwerke eine Breitenbeschränkung von 125 bis 150 mm.

FRANÇAIS
Le PS13 peut prendre en charge une carte graphique/d'extension jusqu'à 13,7 pouces (349 mm), ce qui doit correspondre à quasiment toutes les cartes au détail ou grand public. Il existe une restriction de largeur de 4,92 pouces (125 mm) à 5,91 pouces (150 mm) en fonction de l'épaisseur des disques installés sur la plaque latérale.

ESPAÑOL
La PS13 puede aceptar tarjetas gráficas/de expansión de hasta 13,7 pulgadas (349mm), que deberían aplicarse a casi todas las tarjetas existentes. Existe una restricción de anchura desde 4,92 pulgadas (125mm) hasta 5,91 pulgadas (150mm) dependiendo del grosor de los dispositivos instalados en la placa lateral.

ITALIANO
PS13 supporta schede d'espansione/grafiche lunghe fino a 13,7 pollici (349 mm), lunghezza che dovrebbe applicarsi a quasi tutte le schede di vendita al dettaglio e di largo consumo. C'è una limitazione della larghezza da 4,92 pollici (125 mm) a 5,91 pollici (150 mm) in base allo spessore delle unità installate sulla piastra laterale.

РУССКИЙ
PS13 поддерживает установку карты расширения/графической карты длиной до 349 мм, то есть практически любой доступной в продаже карты. Ограничение по ширине составляет от 125 до 150 мм, в зависимости от толщины дисков, установленных на боковой панели.

繁體中文
PS13支援13. 7吋 (349mm) 長度顯示卡，市面上零售的消費及顯示卡應該都能安裝，顯示卡寬度最大限制介於4. 92吋 (125mm) ~5. 91吋 (150mm) 之間，依側邊安裝的硬碟厚度而定

日 本 語
PS13が対応するのは、最大13. 7インチ (349mm) の拡張/グラフィックスカードで、ほぼ全てのリテールまたはコンシューマーカードが適用されます。幅には、側面パネルに装着されたドライブの厚さに依存して4. 92インチ (125mm) から5. 91インチの制約があります。

한 국 어
PS13은 최대 13.7인치 (349mm) 의 확장/그래픽 카드를 지원할 수 있으며, 이는 거의 모든 소매 판매용 및 소비자용 그래픽 카드에 적용됩니다. 측면 플레이트에 설치되어 있는 드라이브의 두께에 따라 4.92인치 (125mm) 에서 5.91인치 (150mm) 까지 폭이 제한됩니다.

简体中文
PS13支持13. 7吋 (349mm) 长度显示卡，市面上零售的消费及显示卡应该都能安装，显示卡宽度最大限制介于4. 92吋 (125mm) ~5. 91吋 (150mm) 之间，依侧边安装的硬盘厚度而定